WindPitch Education Kit ASSEMBLY MAP

Refer to the following assembly drawing and the Part List reference numbers for assembly.

I. Main Body Assembly

Part List

1. Left Housing
2. Right Housing
3. Rotor Base
4. Profile Blade Holder
5. Blade Pitch Controller
6. Sheet Blade Lower Holder
7. Sheet Blade Upper Holder
8. Blade Assembly Lock
9. Rotor Assembly Lock
10. Molded Profile Blade
11. Polypropylene Sheet Blade
12. Polypropylene Vane
13. Generator
14. Printed Circuit Board Assembly
15. Aluminium Post
16. Support Base Assembly
17. Post Secure Pin
18. Screw, M2.6 x 10 mm
19. Screw, M3 x 2 mm
20. Hex Nut, M2.6
21. Base Extender
22. Output Wire

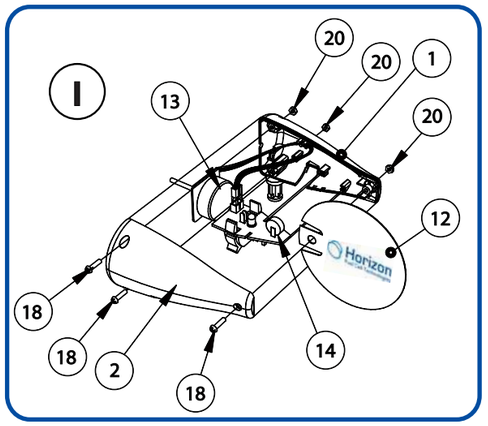

(In case of reassembly) Plug the connector of the generator (13) to the socket on the Printed Circuit Board Assembly (14). Install the Generator (13), Printed Circuit Board Assembly (14) and the Vane (12) in the Main Body Housing (1 & 2). Secure the assembly with screws (18) and nuts (20) as shown in the diagram.

II. Blade Unit Assembly

Profiled Blade:

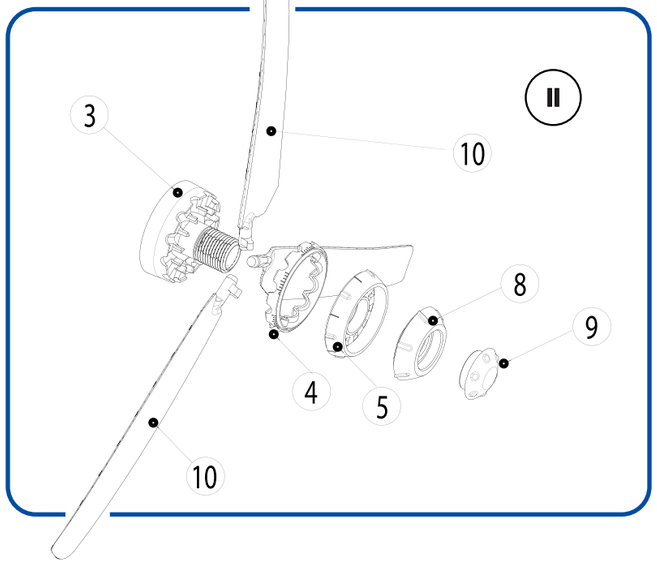

Place the Rotor Base (3) onto the flat surface of a table. Install 3 pcs of the same type of profiled blades evenly on the Rotor Base. Place the Blade Holder (4) on top of the installed blades. Place the Pitch Controller (5) on top of the Blade Holder. Make sure all the levers of the blades are inserted into the slots on the Pitch Controller. Check the thin Pitch Indicator lines on the Pitch Controller to see if they points directly to the Pitch Markings on the Profile Blade Holder. If it is not the case, reposition the Pitch Controller and align the levers of the blades to the adjacent slots. Try rotating the Pitch Controller to see if all the blades twist at the same time. The pitch indicator line should be adjustable between the 0-55 degree pitch indicator lines located on the blade holder(4). Screw the Blade Assembly Lock (8) onto the top of Pitch Controller. Before you tighten the Blade Assembly Lock, adjust the pitch of the blades to the desired angle. Screw the Rotor Assembly Lock (9) onto the top of the Blade Assembly Lock.

***Do not over tighten the Blade Assembly Lock and Rotor Assembly Lock layers otherwise you may have a difficult time in unlocking the Blade Unit Assembly.**

Sheet Blade:

Place the Rotor Base (3) onto the flat surface of a table. Place the Sheet Blade Lower Holder (6) onto the Rotor Base. Install 3 pcs of the Polypropylene Sheet Blade (11) evenly on the Sheet Blade Lower Holder. Place the Sheet Blade Upper Holder (7) onto the Sheet Blade Lower Holder. Screw the Blade Assembly Lock (8) on top of the Sheet Blade Upper Holder. Adjust the Sheet Blades by sliding them to the right side all the way before you completely lock the Blade Assembly Lock layer. This is to ensure that all the Sheet Blades are kept inside the Blade slots. Screw the Rotor Assembly Lock (9) on top of the Blade Locker.

***Do not over tighten the Blade Assembly Lock and Rotor Assembly Lock layers otherwise you may have a difficult time in unlocking the Blade Unit Assembly.**

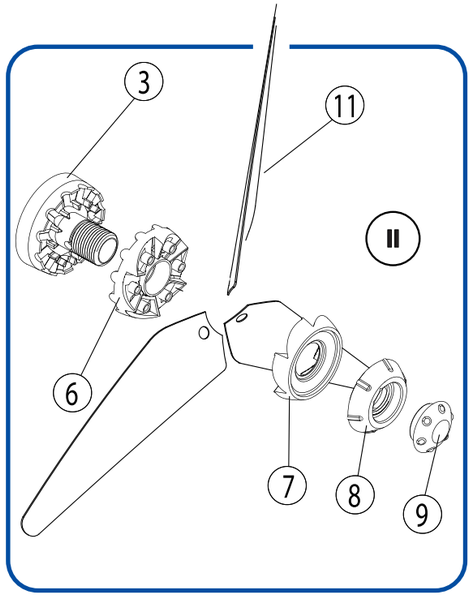

III. Blade Unit Installation

Align the flat area of the rotor shaft to the flat line on the rotor base to ensure the main body and rotor head are properly connected. Make sure you press the Blade Unit all the way onto the shaft. Check that the Blade Unit is securely connected onto the shaft of the turbine. If not properly aligned and installed, the rotor may not effectively turn the rotor shaft and will not generate electricity.

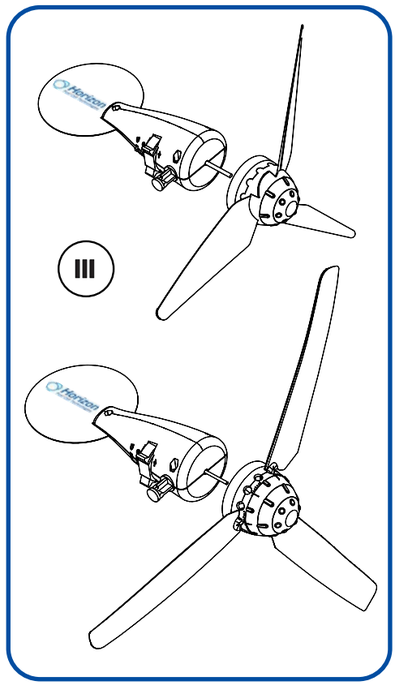

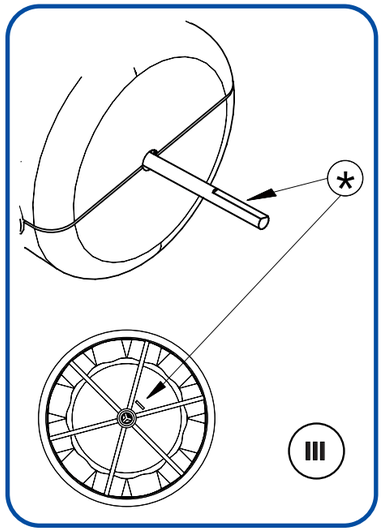

IV. Post and Support Base Assembly

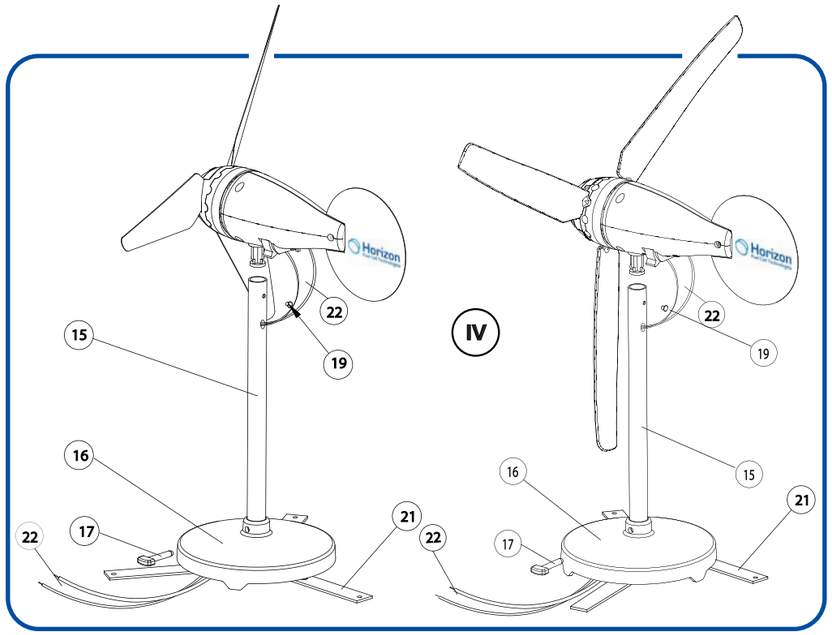

Enable Yawing:

Yaw- To turn about on vertical axis.To move unsteadily or weave.
Extend the Base Extenders (21) fully. Route the output wires from the rotor body output connectors through the inside of the larger hole located on the Aluminium Tube. This hole should be located on the **same** side of the tube (15) with two vertically aligned holes. The wires should exit from the other side of the tube and then further route through the centre hole on the Support Base Assembly for connecting to other devices. Align the screw hole on the tube to the direction in line with one of the Base Extenders if you want the turbine to yaw against the wind when you install the Aluminium Tube to the Support Base Assembly (16). Secure the Aluminium Tube with the Post Secure Pin (17). Install the Body Assembly onto the top of the Aluminium Tube and secure it with the screw (19). The screw should be secured from the **back** side of the wind turbine body into the groove of the plastic stud to **enable** yawing and movement of the turbine body.

Disable Yawing (Not shown in the Assembly Drawing):

Extend the Base Extenders (21) fully. Route the output wires from the rotor body output connectors through the inside of the larger hole located on the Aluminium Tube. This hole should be located on the **opposite** side of the tube (15) with two vertically aligned holes. The wires should exit from the other side of the tube and then further route through the centre hole on the Support Base Assembly for connecting to other devices. Align the screw hole on the tube to the direction in between two of the Base Extenders if you do not want the turbine to yaw against the wind when you install the Aluminium Tube to the Support Base Assembly (16). Secure the Aluminium Tube with the Post Secure Pin (17). Install the Body Assembly onto the top of the Aluminium Tube and secure it with the screw (19). The screw should be secured from the **front** side of the wind turbine body through the hole on aluminum tube into the solid plastic stud to **disable** yawing and movement of the turbine body.

V. Blade Pitch Setting

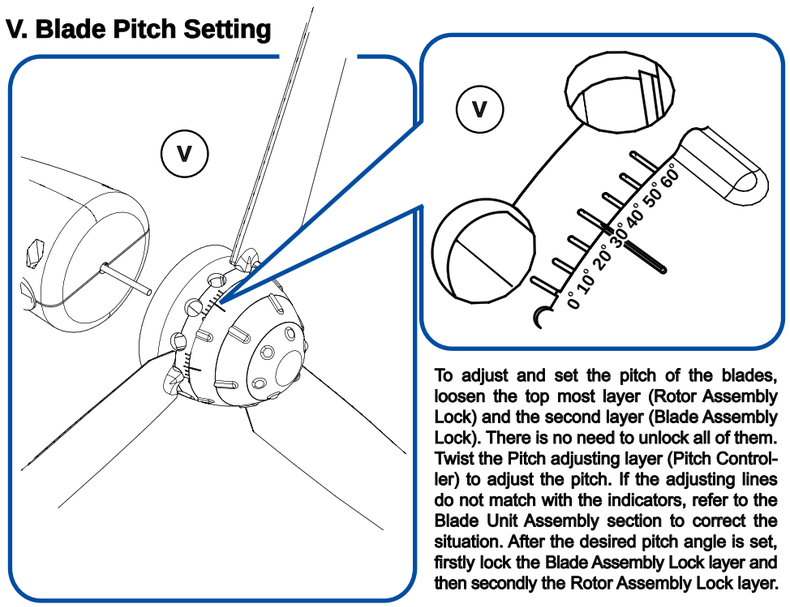

To adjust and set the pitch of the blades, loosen the top most layer (Rotor Assembly Lock) and the second layer (Blade Assembly Lock). There is no need to unlock all of them. Twist the Pitch adjusting layer (Pitch Controller) to adjust the pitch. If the adjusting lines do not match with the indicators, refer to the Blade Unit Assembly section to correct the situation. After the desired pitch angle is set, firstly lock the Blade Assembly Lock layer and then secondly the Rotor Assembly Lock layer.

Locking and Unlocking

Apply reasonable force to secure the layers so that the adjusted pitch can stay at the desired position. DO NOT over tighten the layers, otherwise, you may have problems when you try to unlock the individual layers. If you mistakenly lock the layers too tightly, you may use a rubber mat to assist you in unlocking the layers. Wearing a rubber glove may also give you more friction and better grip in unlocking the layers. If this does not succeed, try locking the second layer slightly in so as to separate the Rotor Assembly Lock and Blade Assembly Lock layers. Afterwards, unlock the Rotor Assembly Lock layer and then the Blade Assembly Lock layer. This double nut mechanism is to prevent the rotor from coming apart when it is rotating at high speed.

The Pitch Angle

The blades themselves have different set angles at different sections to enhance the performance. This setting is to compensate the rotating speed of the blade at different radius (sections) so that the blades will not stall at a particular section. You may have to learn more about a parameter called Tip Speed Ratio to understand more thoroughly. This Ratio defines how fast the turbine is rotating under a wind speed environment. By changing the blade pitch, this ratio will be changed. Thus the output power of the turbine is changed. The pitch indicator on the rotor refers to the pitch at the tip of the blade. The line mark nearest the semi-circle is the 0 degree mark. Each line mark represents a change of 10 degrees. Therefore, the pitch is allowed to be adjusted from 0 to 55 degrees.

With the pitch set to "0" degrees, the rotor will not turn. At smaller pitch value settings, the start up wind speed has to be very high. Maximum output power occurs at a pitch of around 10 degrees. The start up wind speed is higher at a lower pitch setting. If the wind speed is low you should increase the pitch so that you can achieve a higher power output.

Different Blade Types

There are three types of profiled blades included in the WindPitch education kit. After you obtain the maximum output power with a particular blade type, you may replace with another type of profiled blade and evaluate it's performance in comparison.

Custom-28 Profile, BP-28 NACA 44 Profile, BP-44 NACA 63 Profile, BP-63

The difference between these 3 profiles is the amount of material on the side facing the wind. All of them have a much more curved profile on the Rear side (down wind side) to increase the distance for the wind to travel. The Blade Type no. is engraved on the root part of the Blade for your reference.

Changing the Number of Blades

There are twelve positions for the installation of blades and it is possible to install up to twelve blades. However, with 12 blades installed the pitch adjustment is limited. It is recommended to experiment with numbers of 2, 3, 4, and 6 blades installed under various wind speeds and blade pitch settings.

If you have enough wind try reducing to 2 blades as you may get a little more power than using 3 blades. More blades installed will allow the turbine to start rotating more quickly under low wind conditions.

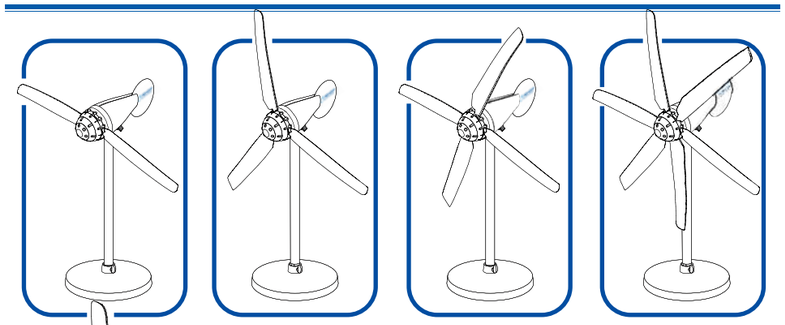

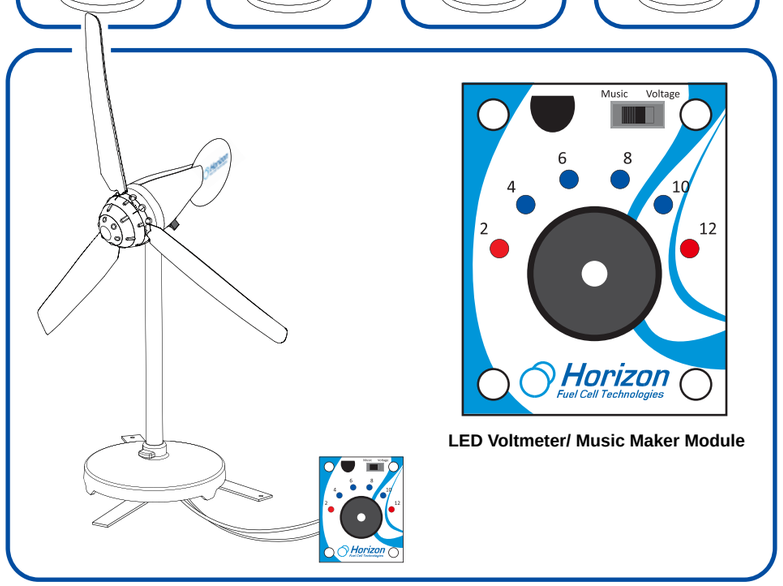

LED Voltmeter/ Music Maker Module

Your WindPitch is now ready for experimentation and be placed in line with an appropriate wind source.

Most commonly a floor or basic desk fan is the source of wind used for experimentation with the WindPitch. A larger fan allows you to test the performance of the turbine at higher wind speeds. You can switch the fan to a lower setting or increase the distance between the fan and the turbine to achieve low wind speeds. It is difficult to achieve high wind speeds with a small fan. A fan of 16" diameter is suitable for doing most wind power experiments.
For optimum performance, align the centre of the fan with that of the nacelle of the turbine. Therefore, it will be better if the height of the fan is adjustable.

Wind from a natural source is never steady. Therefore, the output power of the turbine is always varying. This may lead to uncertainty in taking readings and measurements in the experiments. In order to reduce the variation of wind speed due to turbulence, operate the setup at the middle of a hall or use a wind tunnel. The wind speed will be more stable under these conditions.

With the included LED Voltmeter/ Music Maker Module you can demonstrate the output power created by the WindPitch and use this power to illuminate the LED Lights on the Module or switch the device into music mode to generate a musical melody. The LED device also functions as a basic voltmeter. Each LED light represents about 2V. You can experiment with different parameters such as number of blades, pitch of blades, wind speed, etc…and analyze what type of voltage is created in various experimental conditions. A range of 0-12 Volts is possible to be measured with the LED voltmeter.

To connect the LED Voltmeter/ Music Module simply connect the red and black cable leads from the module to the red and black input jacks on the bottom of the Turbine body. It is highly recommended that you connect the module while the Wind turbine is not in motion and has not been placed in source of wind. Take care to arrange the wires so that they will not be tangled by the rotating blades. Switch the module into Voltage mode to activate the LED module and measure how much voltage is being produced under your experimental conditions. Likewise, switch the module into Music mode to listen to a melody generated by the music maker on the module.

This LED Voltmeter/ Music Module is intended as a basic measurement and demonstration device. To perform much more detailed experiments and explore the full educational value of your WindPitch we recommend purchasing the Horizon Renewable Energy Monitor. With the device and in combination with Horizon's PEM electrolyzers you can perform a multitude of experiments including:

Take your WindPitch experimentation to the next level !

Listed below are additional wind experiments that can be performed with the WindPitch wind turbine using a multimeter or with Horizon's Renewable Energy Monitor Lab and your computer.

- Using Different Blade Shapes Create Power
  This experiment demonstrates how blades with different curvatures produce different degrees of power output. Wind turbine blades are shaped like airplane wings, and one size does not fit all requirements. You will measure and understand how using the right blade shape can produce optimum power for different wind conditions.
- How Many Blades Are Best? 1, 2, 3, 4…
  Using the right number of blades for a given wind condition is important in extracting the maximum electrical power from a wind turbine. You will measure and understand the choices between the numbers of blades that are necessary to produce best results.
- Adjusting Blade Pitch for Best Performance
  Angling the blades into and away from the wind are important elements in creating maximum power – or slowing the speed of rotation. This experiment will show you the techniques for stalling and furling as well as adjusting the blade pitch to extract the maximum degree of power from the wind.
- How Much Power Can Be Extracted from the Wind
  While power from the wind is free as long as it blows, it is still limited to certain physical laws. This experiment will show you how to measure wind speed versus extracted wind power.
- Using Wind Power to Generate Hydrogen
  One important use of wind power is to generate hydrogen in a clean, non-polluting manner. This experiment shows you exactly how to do it.
- Measure Wind Turbine Performance Using RPM
  Using our electronic measurement tool you can measure the voltage, current, power and RPM (revolutions per minute) rotational speed of the wind turbine and see it displayed on the measurement tool as well as your computer. Watch the RPM as it changes with wind speed and resistor loading and witness how to slow down and even stop the wind turbine spinning without even touching it – just by adding the right resistor combinations. Make measurements for wind power and turbine efficiency to really understand how this remarkable device works.
- Build a Wind Farm
  Arrange multiple WindPitch turbines in series and parallel configurations in order to study the voltage, current, and power generated. Design a simulation of a commercial wind farm in model scale and learn the potential of wind power as a mass energy source.
- Maximum Power Point Tracking
  This experiment uses a variable resistor, much like the round knob on the volume control on your car radio, to harvest the maximum power that the wind turbine produces. Just like tuning in a particular radio station you can fine tune the wind turbine's performance to generate maximum power by adjusting the resistor to the correct value. You will find that the maximum power varies with wind speed, the number of blades and blade pitch so it is always changing. By performing this experiment you will come to understand how to maximize the power output of the wind turbine under many different conditions. This is called MPPT or Maximum Power Point Tracking and all commercial wind turbines use it to achieve optimum performance. Now you can do the same in model scale.

Purchase additional WindPitch Education Kits and Circuit Board Module Base and red/black hookup leads needed to connect multiple turbines in series and parallel here- http://www.horizonfuelcell.com/store.htm#02

Safety

Before you proceed to perform experiments with the turbine, please note that the rotor can rotate at a few thousand RPM's (Rotations per Minute), especially when no load is connected. When the wind speed is high and the turbine is set to output high power, the rotating speed of the rotor can also be very fast. Bodily injury may result if struck by the rotating blades. Wearing goggles is suggested in the case that your head will be close to the rotating blades. You should also install the turbine properly so that it will not "walk" or topple over. The weight of the base has been increased from previous versions to prevent the turbine from "walking". Placing a rubber mat, polyfoam, or a thin book under the base helps stabilize the turbine if the surface of the table is too hard. You may place adhesive tape on the Base Extender to help secure the turbine to a secure surface. In the case that the turbine topples at high rotational speed, to avoid being hurt, do not try to catch it. Extending the "Base Extenders" increases the diameter of the base and reduces the chance of toppling over. Please note that one of the Base Extenders has to be aligned in the direction of vane to prevent it from toppling over. Arranging the wires from the turbine to run inside the aluminium tube through the opening on the post and base to external devices prevents the wires from tangling by the rotating blades. All of the above measures help to reduce accidents during operation of the turbine. However, you have to make sure that the environment is safe for doing experiments. Adult supervision is required. This wind turbine is not suitable for children under 12 years old.